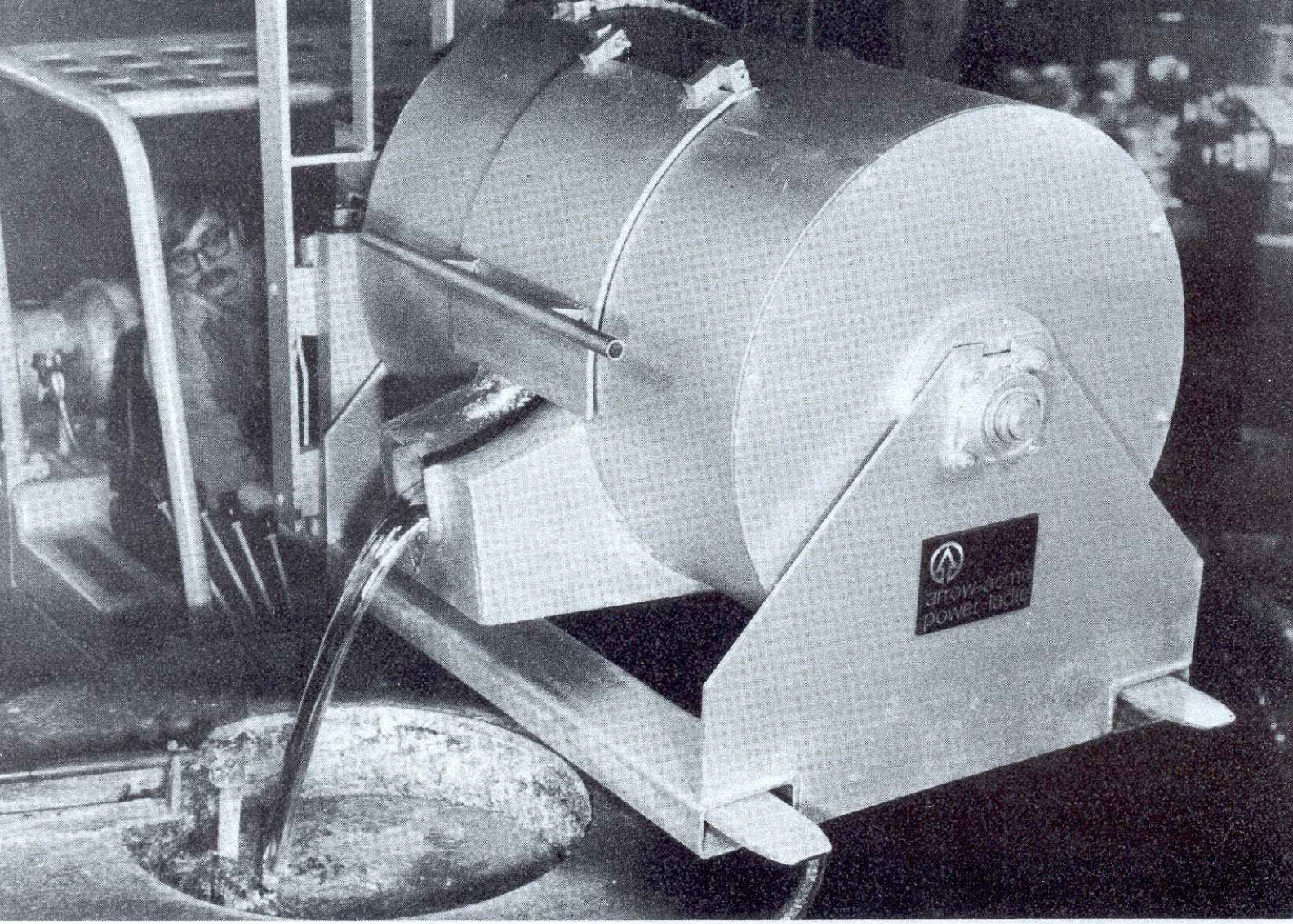

power ladle™

metal transfer ladle

- Built-in actuator uses 12V electrical system of LP or gas truck. Other voltages are available for electric trucks.
- Convenient drive in attachment to standard lift trucks.
- Quick disconnect (30 seconds) frees lift truck for other uses.
- No special outfitting of lift trucks with hydraulic tilt actuators.
- Simple adaptation - electric switch adapts any gas or electric lift truck, with common voltage, in your plant. (A separate battery pack may be used on trucks with unusual voltages.)
- High quality inter-locking brick lining is standard.
- Safer operation - self-contained cover to resist spillage of metal.
- Specially balanced for safety.
- Heavy steel fabricated construction through out.

The Power Ladle Story

As custom producers of diecastings sand and permanent mold castings, we were aware of the need for a good lift truck method for transporting molten metal. It was clear that it should fit standard lift trucks, without special hydraulics, since lift trucks do fail and the metal must keep moving. With our experience in furnace building it was logical that this unit must be a dependable, safe, heavy duty, furnace quality machine.

The answer to these criteria was our battery actuated Power Ladle. After two years of testing and refining in our own plant, the Power Ladle was introduced at the 1977 SDCE exposition. Several orders were received at that show and since then it has been widely accepted across the industry.

arrow-acme corporation

east 2nd st. and harris dr. webster city, iowa 50595 515-832-3120

a subsidiary of harris metals, incorporated

patented

Power Ladle Model PL855

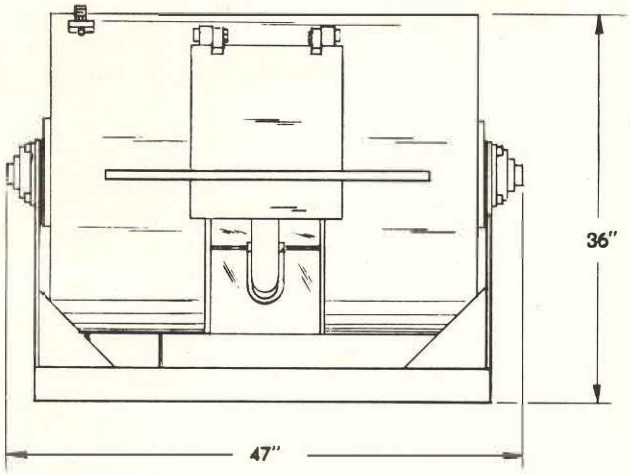

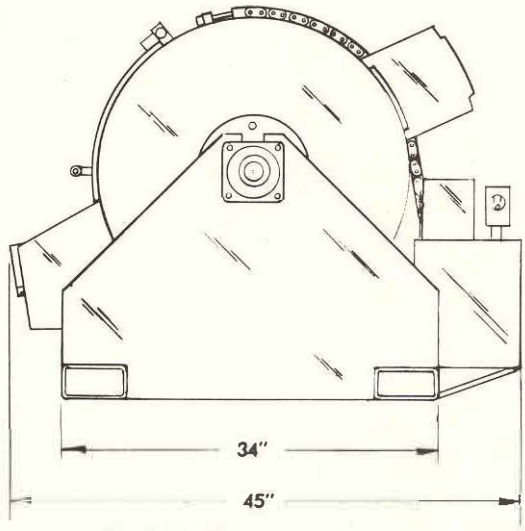

PRICE $6,200.00 F.O.B. Webster City, Iowa

Date 6-13-85 Price does not include packaging for exporting

Weight of Ladle	2340 lbs.
Capacity: Aluminum	600 lbs.
Zinc	1500 lbs.
Motor: 12 VDC	10 AMPS

Other voltages available upon request.

Opening size under cover 9 x 14

Pour from left side by changing ends with lift truck.

Recommended Lift Truck Size - 4000 lbs.

Lining: 85% Alumina chemically bonded brick. Giving 2½ times the strength of ordinary 85% Alumina type refractories.

Components: extensive use of standard off the shelf items.

Reliability: designed with extra size components for low stress and long life under foundry conditions.

Power Ladle Model PL857

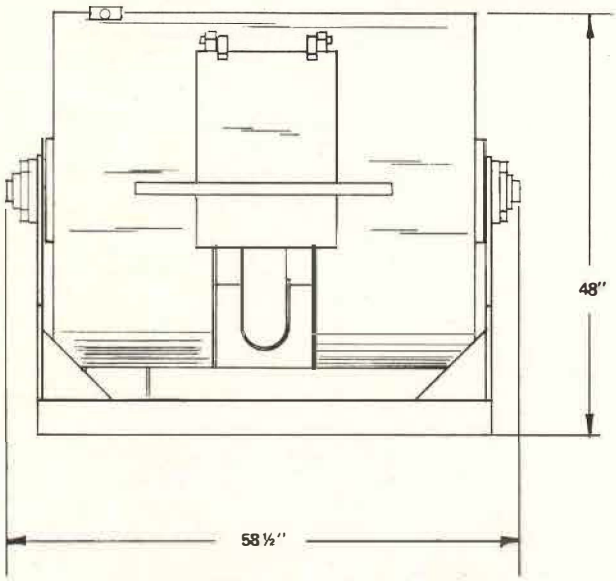

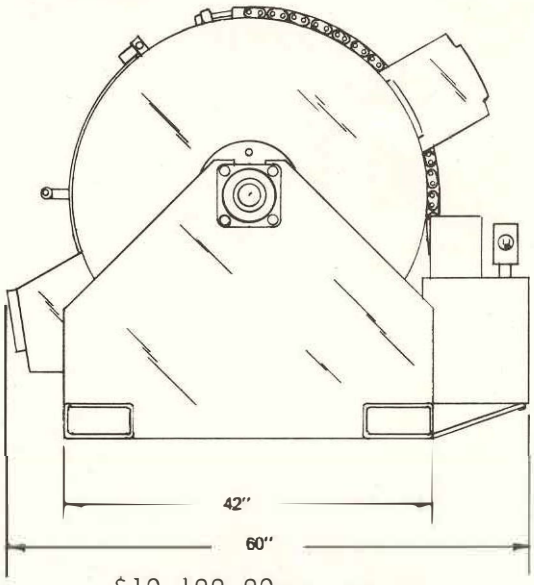

PRICE $10,100.00 F.O.B. Webster City, Iowa

Date 6-13-85 Price does not include packaging for exporting.

Weight of ladle	4320 lbs.
Capacity: Aluminum	1800 lbs.
Zinc	4500 lbs.
Motor: 12VDC	10 AMPS

Other voltages available upon request.

Opening size under cover 12 x 21

Pour from left side by changing ends with lift truck.

Recommended Lift Truck Size--
8000 lbs. for aluminum
10000 lbs. for zinc

Lining: 85% Alumina chemically bonded brick. Giving 2½ times the strength of ordinary 85% Alumina type refractories.

Components: extensive use of standard off the shelf items.

Reliability: designed with extra size components for low stress and long life under foundry conditions.

Power Ladle Model PL959

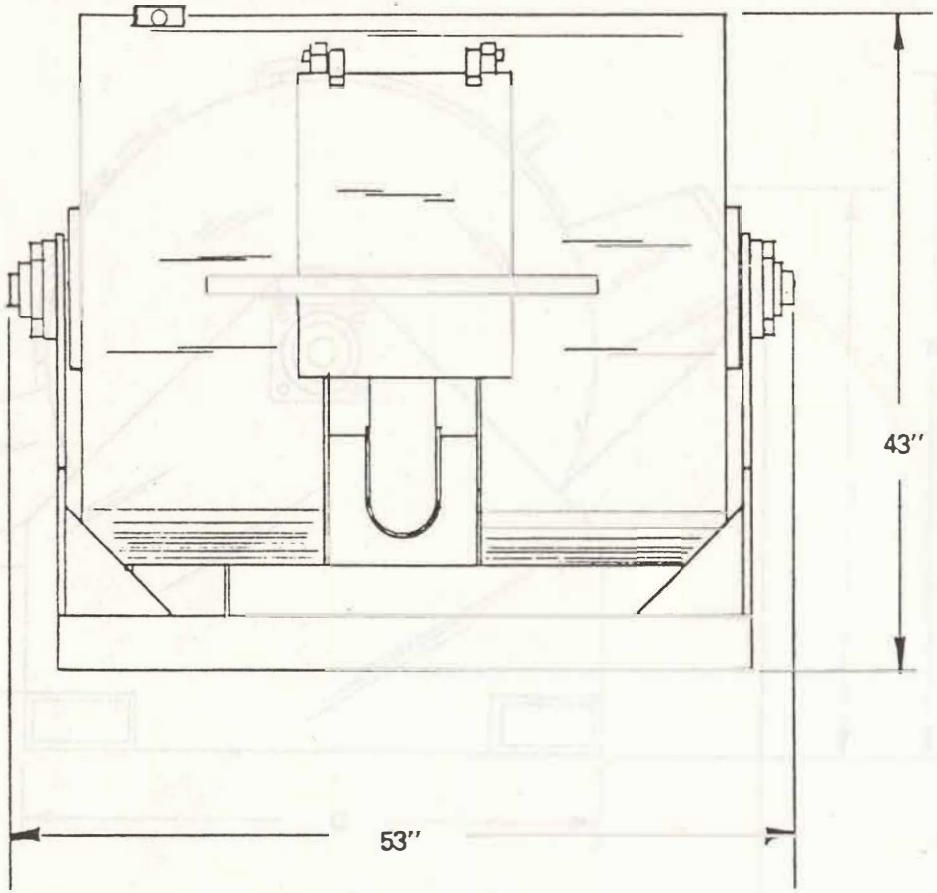

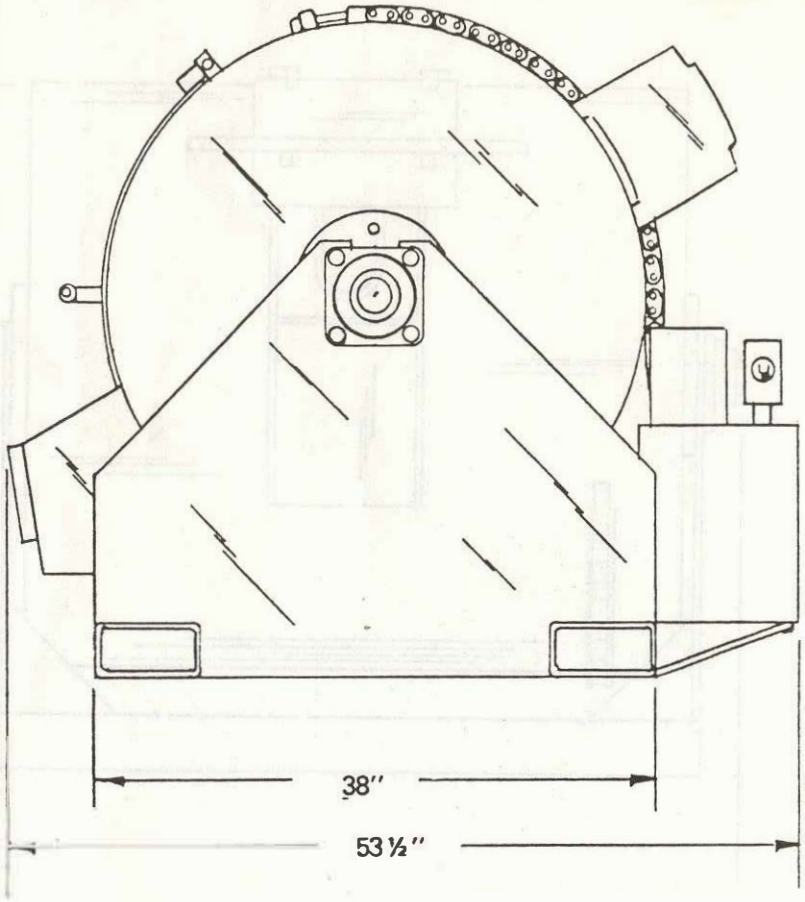

Weight of Ladle	3600 lbs.
Capacity: Aluminum	1200 lbs.
Zinc	3000 lbs.
Motor: 12VDC	10 AMPS

Other voltages available upon request.

Opening size under cover 12 x 19 ½

Pour from left side by changing ends with lift truck.

Reliability; designed with extra size components for low stress and long life under foundry conditions.

Lining: 85% Alumina chemically bonded brick.
Giving 2 ½ times the strength of ordinary 85% Alumina type refractories.

PRICE $8,580.00 F.O.B. Webster City, Iowa

Date 8-8-86

Recommended Lift Truck Size-6000 lbs for aluminum
8000 lbs for zinc

Components: extensive use of standard off the shelf items.

arrow-acme corporation

1603 east second street, webster city, iowa 50595 515-832-3120

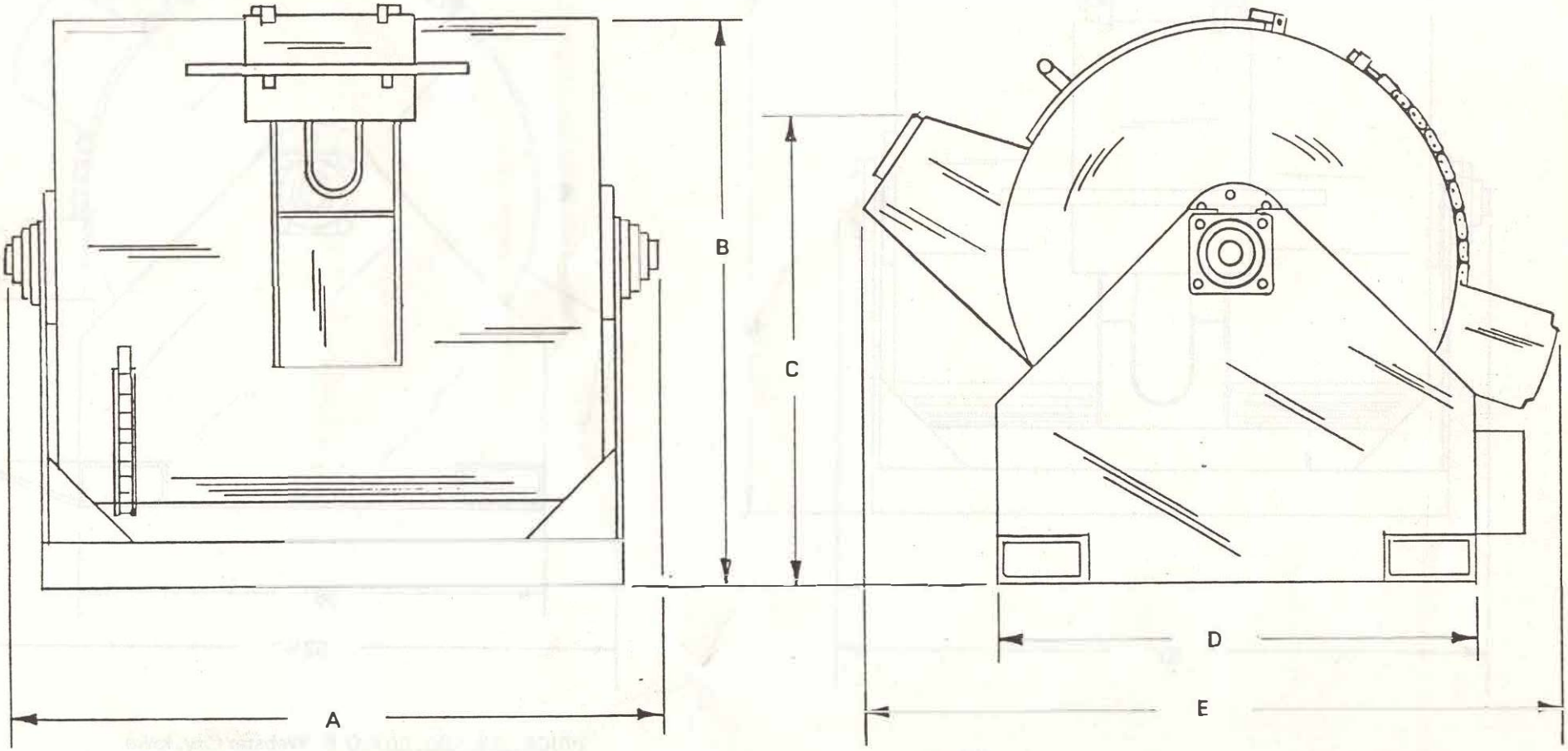

Model No.	DIMENSIONS				
	A	B	C	D	E
PL855	47"	36"	25" at fill height	34"	45"
PL857	58 ½"	48"	36" at fill height	42"	60"
PL959	53"	43"	34 ½" at fill height	38"	53 ½"